Building Inspection Division
Lakeland
THESE PLANS HAVE BEEN REVIEWED FOR COMPLIANCE WITH THE CURRENT EDITION OF THE FLORIDA BUILDING CODE
Date: 11/15/19
Permit Number: BLD19-06035

WL1147

1 OR 2 HOUR FIRE RATED THROUGH PENETRATION FIRESTOP FOR SINGLE METAL PIPE THROUGH GYPSUM WALLS USING TREMSTOP WBM

F-RATING = 1 AND 2 HR.
T-RATING = 0 AND 1/2 HR.

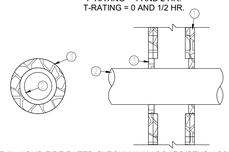

1. 1 OR 2 - HOUR FIRE RATED GYPSUM WALLBOARD/STUD ASSEMBLY
2. A) STEEL PIPE - 6" DIAM.(OR SMALLER) SCH. 40 (OR HEAVIER) STEEL B) CONDUIT - 4" DIAM.(OR SMALLER) EMT OR RIGID STEEL
3. TREMSTOPWBM - FILL MAX. 3/4" ANNULUS AT A THICKNESS OF 1 " (2 HR. F-RATING) OR 3/4" (1 HR. F-RATING).

1 FIRE RATED GYPSUM PENETRATION FOR METAL PIPE

E6-1-01 SCALE: N.T.S.

WL2151

1 OR 2 HOUR FIRE RATED THROUGH PENETRATION FIRESTOP FOR PLASTIC PIPE THROUGH GYPSUM WALLS USING FYRE-CAN SLEEVE

F-RATING = 2 HR.
T-RATING = 1 HR.

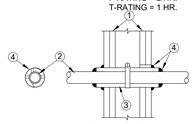

1. PRE-RATED GYPSUM WALLBOARD/STUD ASSEMBLY.
2. PLASTIC PIPE - 3" DIA. OR 2" DIA. SCH.40 PVC FOR USE IN CLOSED OR VENTED PIPING SYSTEMS.
3. FYRE-CAN SLEEVE/INTUMESCENT DEVICE:

NOM. PIPE DIAM. (IN.)	DEVICE SIZE	DIAM. OF OPENING (IN.)	ANNULAR SPACE (IN.)
2	TS2	3-1/2	1/4 TO 7/8
3	TS3	4-3/4	1/2 TO 3/4

4. TREMSTOP WBM - MIN. 1/4" THICK SEALANT APPLIED AT SLEEVE/PIPE AND SLEEVE/WALL INTERFACES.

2 FIRE RATED GYPSUM PENETRATION FOR PLASTIC PIPE

E6-1-01 SCALE: N.T.S.

CAJ-1304

2 HOUR FIRE RATED THROUGH PENETRATION FIRESTOP FOR SINGLE PLASTIC PIPE THROUGH CONCRETE FLOORS OR WALLS USING FYRE-SHIELD.

F-RATING = 2 HR.
T-RATING = 0 HR.

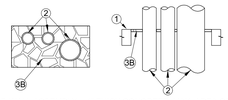

1. FLOOR OR WALL ASSEMBLY = 4" THICK CONCRETE, MAX. AREA OF OPENING IS 288 SQ. IN.
2. COPPER PIPE: 4" DIA. (OR SMALLER) REGULAR (OR HEAVIER) COPPER. STEEL PIPE: 8" DIA. (OR SMALLER) SCH.40 (OR HEAVIER) STEEL. CONDUIT: 4" DIA. (OR SMALLER) EMT OR 6" DIA. (OR SMALLER) STEEL CONDUIT. COPPER TUBING: 4" DIA.(OR SMALLER) TYPE L(OR HEAVIER) COPPER. IRON PIPE: 8" DIA.(OR SMALLER) CAST OR DUCTILE IRON. MAX. NUMBER OF PIPES WITH OPENING IS THREE (3).

3 A) FORMING MATERIAL - (NOT SHOWN) - NOM. 1" THICK POLY URETHANE BACKER ROD FRICTION FITTED INTO OPENING.

B) NOM$1\frac{1}{2}$" FYRE-SHIELD THICKNESS INSTALLED WITHIN OPENING.

NOTE: FOR WALL APPLY FYRE-SHIELD TO BOTH SURFACES OF WALL.

3 CONCRETE PENETRATION FOR METAL PIPES

E6-1-01 SCALE: N.T.S.

CAJ 2221

2 HOUR FIRE RATED THROUGH PENETRATION FIRESTOP FOR SINGLE PLASTIC PIPE THROUGH CONCRETE FLOORS OR WALLS USING BLAZEMASTER CAULK & WALK

F-RATING = 2 HR.
T-RATING = 1-1/2 HR.

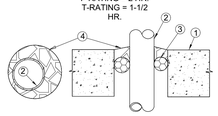

1. PRE-RATED CONCRETE FLOORS OR BLOCK WALLS = MIN. 4-1/2" THICKNESS
2. PLASTIC PIPE - A) NOM. 2" DIAM. (OR SMALLER) SCH. 40 PVC PIPE. B) NOM. 2" DIAM. (OR SMALLER) CPVC PIPE THE ANNULAR SPACE RANGE SHALL BE MIN 1/4" TO MAX 3/8"
   NOTE: FOR USE IN CLOSED (PROCESS OR SUPPLY) PIPING SYSTEMS.
3. FORMING MATERIAL - FOAM BACKER ROD FIRMLY PACKED INTO THE OPENING AS A PERMANENT FORM.
4. BLAZEMASTER CAULK & WALK - MIN 1/2" THICKNESS OF SEALANT APPLIED WITHIN OPENING, FLUSH TOP SURFACE OF FLOOR OR BOTH SURFACES OF WALL ASSEMBLY

4 CONCRETE PENETRATION FOR PLASTIC PIPES

E6-1-01 SCALE: N.T.S.

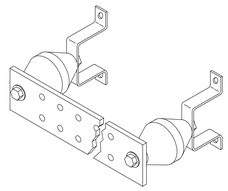

5 GROUND BAR

E6-1-01 SCALE: N.T.S.

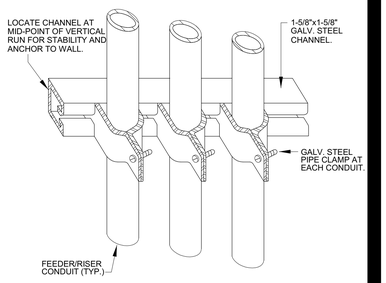

6 WALL CONDUIT SUPPORT

E6-1-01 SCALE: N.T.S.

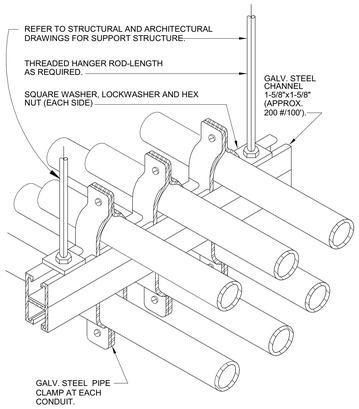

COORDINATE CONDUIT ROUTING WITH HVAC DUCT.

7 CEILING CONDUIT SUPPORT

E6-1-01 SCALE: N.T.S.

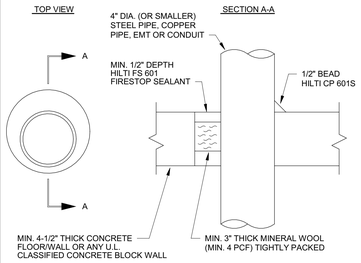

NOTES:
1. MAXIMUM DIAMETER OF OPENING = 6".
2. ANNULAR SPACE = MIN. 0" (POINT CONTACT), MAX. 2".
3. WALLS REQUIRE 1/2" OF SEALANT FLUSH WITH BOTH SIDES.

F RATING = 2-HR.
T RATING = 0-HR.

INSTALLATION INSTRUCTIONS FOR UL No. CAJ1149

STEP 1 - PREPARATION: ALL SURFACES MUST BE CLEAN, SOUND, DRY AND FROST FREE PRIOR TO APPLICATION OF MATERIALS.

STEP 2 - BACKING MATERIAL: PACK MINERAL WOOL TIGHTLY AROUND THE PENETRATING ITEM TO THE DEPTH SHOWN IN THE DRAWINGS, AND RECESS IT BELOW THE TOP SURFACE OF THE FLOOR (OR BOTH SURFACES OF A WALL) TO ALLOW PROPER SPACE FOR THE FIRESTOP MATERIAL.

STEP 3 - FIRESTOP SEALANT: APPLY THE FIRESTOP SEALANT OVER THE BACKING MATERIAL TO THE DEPTH SHOWN. IF THE PIPE IS OFFSET TO ONE SIDE, APPLY A 1/2" BEAD OF FIRESTOP SEALANT AROUND ITS CIRCUMFERENCE WHERE IT CONTACTS THE WALL OR FLOOR.

WALL PENETRATIONS REQUIRED FIRESTOP SEALANT ON BOTH SIDES. LEAVE COMPLETED SEAL UNDISTURBED FOR 48 HOURS.

8 METAL PIPE THROUGH CONCRETE FLOOR/WALL OF BLOCK WALL

E6-1-01 SCALE: N.T.S.

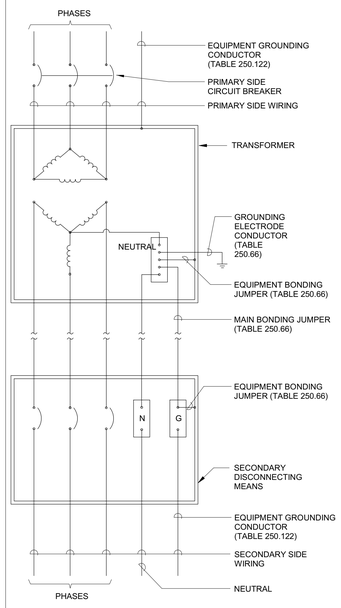

9 TRANSFORMER GROUNDING

E6-1-01 SCALE: N.T.S.

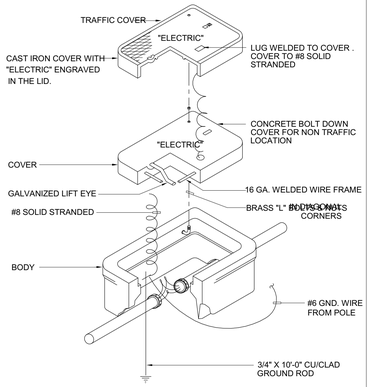

10 PULL BOX

E6-1-01 SCALE: N.T.S.

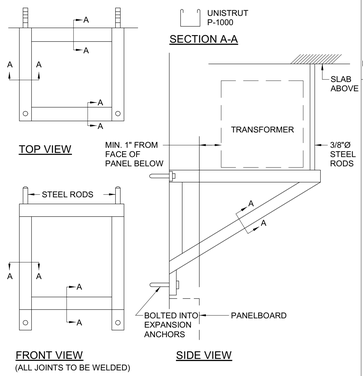

11 TRANSFORMER MOUNTING

E6-1-01 SCALE: N.T.S.

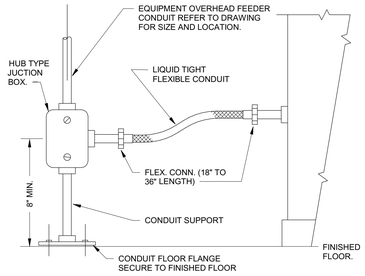

12 MOTOR CONNECTION (1)

E6-1-01 SCALE: N.T.S.

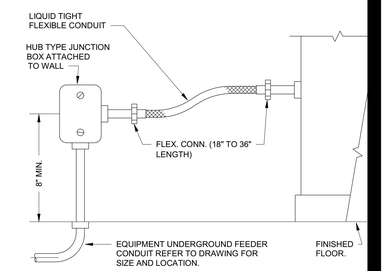

13 MOTOR CONNECTION (2)

E6-1-01 SCALE: N.T.S.

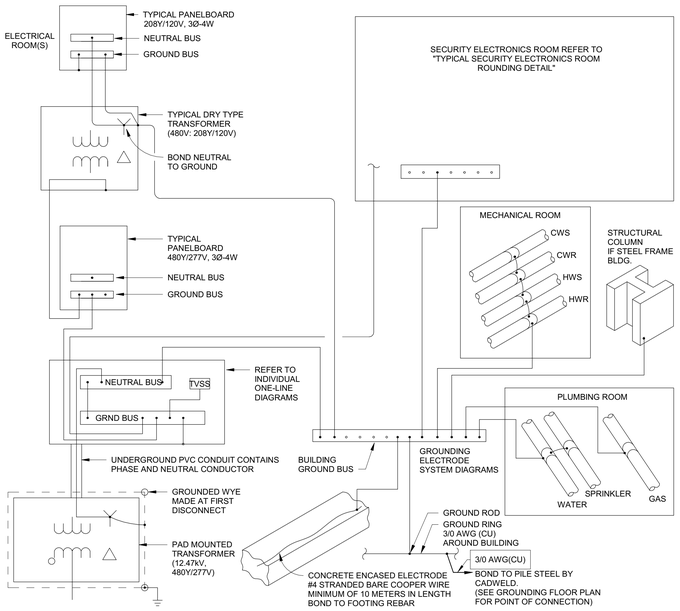

NOTE: ALL CONNECTIONS OF THE GROUNDING ELECTRODE SYSTEM SHALL BE IRREVERSIBLE.

14 SYSTEM GROUNDING SCHEMATIC DIAGRAM

E6-1-01 SCALE: N.T.S.

Check state and local codes for such requirements.

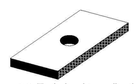

Figure 4-1: Typical pad type vibration

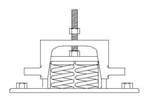

Figure 4-2: Spring mount vibration isolator

Anchor bolts should be loosened and double nutted after installation to avoid base distortion caused by unlevel inertia pads.

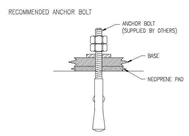

Figure 4-3: Recommended anchor bolt

Anchor requirements:
- (14) 5/8" Ø Kwik Bolt TZ CS Anchor Bolts
- 3 1/8" embedment
- 4000 psi cracked concrete
- 6" minimum slab thickness
- 8" edge distance
- Anchor selection meets or exceeds IBC 2000, 2003, 2006 and 2009 compliance requirements.

15 ANCHORS

E6-1-01 SCALE: N.T.S.

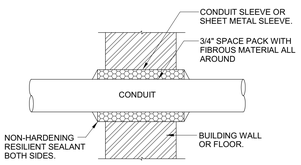

(FOR SOUND RATED WALLS)

17 CONDUIT WALL PENETRATION

E6-1-01 SCALE: N.T.S.

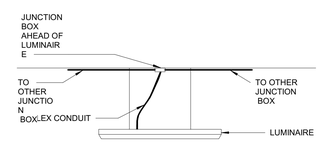

LUMINAIRE AND INSTALATION SHALL COMPLY WITH NEC 410.

18 LUMINAIRE OUTLET BOX

E6-1-01 SCALE: N.T.S.

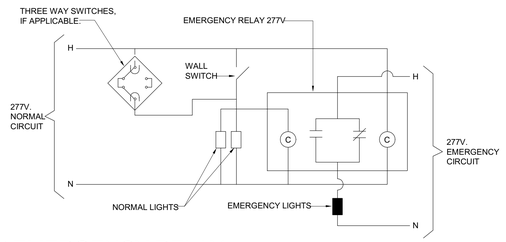

16 EMERGENCY RELAY

E6-1-01 SCALE: N.T.S.

AECOM
BATSON-COOK CONSTRUCTION

PROJECT

PUBLIX HEADQUARTERS BUILDING ADDITION AND PARKING LOT EXPANSION

3300 PUBLIX CORPORATE PARKWAY
LAKELAND, FL 33811

CLIENT

Publix

3300 PUBLIX CORPORATE PARKWAY
LAKELAND, FL 33811

www.publix.com

CONSULTANT

AECOM

AECOM TECHNICAL SERVICES, INC.
800 Douglas Entrance
North Tower, 2nd Floor
Coral Gables, FL 33134
305.444.4691 tel 305.447.3580 fax
www.aecom.com

ARCHITECTURE
LICENSE NO. AA26000687

ENGINEERING
CA LIC. NO. 8115

http://www.aecom.com

REGISTRATION

HENRYK B. JUSZCZYK, LIC ENS. NO. 58082, STATE OF FLORIDA, PROFESSIONAL ENGINEER

HENRYK B. JUSZCZYK, PROFESSIONAL ENGINEER, STATE OF FLORIDA, LICENSE NO. 58082

THIS ITEM HAS BEEN DIGITALLY SIGNED AND SEALED BY HENRYK B. JUSZCZYK, PROFESSIONAL ENGINEER, STATE OF FLORIDA, LICENSE NO. 58082 ON THE DATE INDICATED HERE. PRINTED COPIES OF THIS DOCUMENT ARE NOT CONSIDERED SIGNED AND SEALED AND THE SIGNATURE MUST BE VERIFIED ON ANY ELECTRONIC COPIES.

Henryk B Juszczyk
2019.08.22 23:46:05
-04'00'

KEY PLAN

EXISTING	A	B

ISSUE/REVISION

I/R	DATE	DESCRIPTION
0	AUG 23, 2019	CONSTRUCTION DOCUMENTS

PROJECT NUMBER

60601397

SHEET TITLE

ELECTRICAL DETAILS

SHEET NUMBER

E6-1-01

NOTICE: THE OFFICIAL RECORD OF THIS SHEET IS THE ELECTRONIC FILE SIGNED AND SEALED UNDER RULE 61G15-23.004, F.A.C.

©2016 AECOM Corporation

Last Plotted: 8/22/2019 4:02:43 PM
Filename: BM 300\60601397 Publix HQ\60601397_Publix HQ_ELECT_E2019.rvt

Printed on ___% Post-Consumer Recycled Content Paper